Instruction book

SC Series Construction Elevator

SC Series Construction elevator
Instruction book

SC series construction elevatoris with high quality, good looking in shape, safe and reliable when working.

SC series construction elevatorcan meet all national standard rules (GB/T10054-205), which include technical requirements, test methods and rules and so on.

SC series construction elevatorhas achieved State Agency's technical appraisal of Chinese authority .

Welcome all customers from home and abroad.

Contents

1. Summary and feature

SC series construction elevatoris a new generation product which designed by the Institute of Building Mechanization of China Academy of Building Research.

It own advanced technology, safety and reliable operation, convenient maintenance and repair. It the idealist transport equipment.

Our company improve the product from the kinds of side according to the customer's requirement. The outlook is more perfect, more suitable for use. It also add a lot of configurations, such as frequency conversion system, system, monitor equipment, layer stop protection device, GPS positioner, microcomputer wind speed device and so on. which are optional as required.

SC series construction elevatoradoped computer aided design. Comparing with traditional building hoists, it is attractive, light, easy to handle, secure, applicable and popular. Depending on special needs of regular or irregular sections, the lifting capacity can reach up to 1~2 tons, and the running speed can reach 28~38m/min.Moreover,VVVF speed adjust and PLC control can achieve limitless speed, automatic layer selecting and leveling as required. SC series construction elevatoris excellent in technical performance, more secure in operation mechanism, and more compact in structure. It has the following several notable features:

1.1. Safety protection system well-equipped and reliable. It attached safety falling protection device. Ensure the work security is the best on the same product.

1.2. Combined type design. It can shape various specification with different speed,

different load. The product accuracy, practicability and high generalization degree are improved greatly.

1.3. The runs smoothly and more comfortable. The driver located in the tope of cage, so the internal area is enlarged more, rolling is smooth, mechanical vibration is smaller than normal. To bring a comfortable and spacious working environment for operator.

Our product is your best choice, it will be your helper for construction and improve your productivity.

2. Technical parameter

Name	Unit	SC100	SC100/100	SC200	SC200/200
Rating loading capacity	Kg	1000	2×1000	2000	2×2000
Passenger number	Person	12	2×12	16	2×16
Rating rising rate	M/min	36	36	36	36
Max. promoting height	M	200	200	200	200
Motor power	KW	2×11	2×2×11	3×11	2×3×11
Cage size	M	3*1.3*2.5	3*1.3*2.5	3*1.5*2.5	3*1.5*2.5
650 mast section weight	Kg	128	150	128	150
650 mast section length	M	0.65×0.65 ×1.508	0.65×0.65 ×1.508	0.65×0.65 ×1.508	0.65×0.65 ×1.508
Steeve rating rising weight	Kg	200	200	200	200

Table 1.

3. Structure principle introduction

SC series include as following parts: guide rail bracket, drive plate assembly, driver element, electric system, breaker mounting plate, falling protector, stop block, upper distribution box, hoist’s guard rail, cable storage tank, cable guide bracket, attached device, cable cantilever, erection system, pulley system and so on.

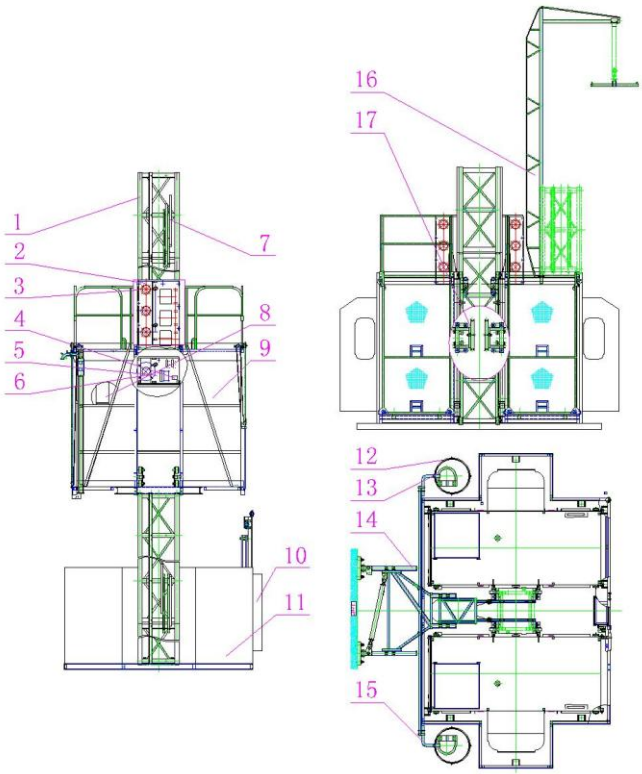

Figure 1 SC series Construction hoist

1. guide rail bracket 2.drive plate assembly 3. driver element 4.electric system 5.breaker mounting plate 6.falling protector 7.stop block 8.upper distribution box 9.cage 10.lower distribution box 11.hoist's guard rail 12cable storage tank 13.cable guide bracket 14.attached device 15.cable cantilever 16.erection system 17.pulley system

3.1 Guide rail bracket: it's a travel track of construction hoist, which assembled through the 1508mm length standard mast section and connected by high-strength bolt M24*240,the bolt preload should not less 30kg.The mast section welding by seamless steel pipe, angle iron and so on. It equipped with rack which fastening by three hexagonal screw, also can be disconnectable. Mast section four pieces stick of under welding setting a seam allowance. Spring pin put in the rack bottom, in order the mast section can be installed correctly. The mast cross section size is 650mm*650mm square shape. Guide rail bracket is connected with building by attached device. SC series standard height is 50m.

3.2 Drive plate assembly: it’s a key part connect driver or driver with whole structure, the driving power pass on the cage through this part. Rack of driver system-and-pinion of guide rail bracket formed construction elevatorvertical motion

3.3 Driver element: it’s the driving force part of construction hoist. This machine is composed of three driver unit which working at the same time, it bring the whole machinery and rated load(or construction passenger) vertical motion. Driver elements composed by driving gear, retarder, shaft joint, plum flower form coupling elastic block, electromagnetic brakes motor. Retarder is planar double-enveloping worm gearing reducer, firm structure, high carrying load and mechanical efficiency, long service life, smooth working, Safe and reliable and other good feature .Coupler is claw flexible, there is a bumper block between the two coupler for lighten traveling vibrations and shock. Motor is YZZ132M-4 Disc brake 3-phase motors for jack-up. The disc brake electromagnet can realize the automatic tracking following the wear down of disc, braking torque can be adjusted.

3.4. Electric system: It’s the mechanical control part of construction hoist,

All the motion part be operate by electric system. It include up electric control, down control, driver operate platform and master control cable and so on.

3.5. Safety device block board: It the safety device connects with other parts. There is falling protection device on it. If the cage overspeed decline due to some accident, the safety device block board can load impact force of sudden stop.

3.6.Falling protector:SAJ40-1.2A falling protector is national patent technology products. It used many advanced technology, such as the sling block no impact, without dismantling machine can check with the brake friction wear and so on. When the cage over speed falling, it can load on the railroad frame steadily, cut off the power, make sure the people

and equipment on safe. Safety device agitation velocity has been adjust well before delivery and seal it. The user cannot open and adjust them without authorization in case it could lead to other problem. There is service life on the safety device brand, if over that service life, the user should send back to the manufacturer to check it again, make sure the effectiveness, or else you must take the consequences.

3.7. Limited device: It included upper and under stop block, upper and under ultimate block. The stop block make sure the cage can travel to the specific location and cut off the power automatically, construction elevatorwill stopping the service.The ultimate block will take effect if the limit switch have some problem cannot stop the machinery, ensure the cage lower than roof and higher than ground. Limit switch is not self-reset, it must by manual. The user should often check these part position, make sure switch motion is correctly.

3.8 Upper distribution box: It’s the centre part of electric system which installed inside of machinery, Interior mainly equipped up and down traveling contactor, control transformer, overheat protector and open-phase relay protector and so on.

3.9 Cage: It’s a closed structure and welded by structural steel, expanded metal and steel plate. The underside and top surface are finished by riffled plate, there have a exit door on the top of cage ,the area is not less than 0.4x0.6m^2,it just for it just for the install and maintenance people. The exit door is sliding type, electrical chain device hanging on th cage, driver room on the outside, the console switch setting in the room.12 pieces of ring guide roller travel with guide rail.

3.10. Under Distribution box: It’s the power station, which installed on the ground rail.

3.11. Guide rail: it mainly include bottom frame and protective fence.

(1)The bottom frame composed by structural steel (channel steel),it’s connect with ground

protective fence , Central is the guide frame pedestal. It can bear all the vertical load passed by construction hoist. The bottom frame will fit together with lift concrete foundation anchor through the foundation bolt when prepare for installation.

(2)Protective fence welded by rectangular tube and expanded metal, it surround the all the lift machinery parts and shaped a closed region. Ensure the people keep away from this area when the machinery is on working.

Guardrail is located in protective fence entrance which equipped electromechanical interlocking device.

3.12. Cable storage tank: This part used for storage cable. When the cage move up, the cage will take the cable move, when the cage move down, the cable will be collected in the tank, vide the cable fall on the ground to prevent leakage occurs, electric shock hazard.

3.13. Cable guide bracket: It’s used for protecting the cable.when the is on working, make sure the cable within the guide bracket.It can prevent the cable twine with other equipment when the machinery is on working, keep from the danger. When prepare to install the cable guide bracket, the user should ensure the cable support and main cable across the guard smoothly.

3.14. Attachment device: its connection part for guide rail bracket and building, it must be installed according to the design requirement. The attachment device is directly related to the stability of the construction lifter and normal working condition. So the user should treat it seriously, in order to guarantee the steady of guide rail bracket and whole machinery. Besides, attachment device also offer the install site for cable guide bracket.

3.15.Cable support bracket: It drag cable to up and down, main cable dragged by support bracket, so it can pass the cable guide rail safely,protect the cable was scratched and lead to some accident. Besides, cable support bracket also can put the cable out of the guide

rail, then the cable be collected into tank safely.

3.16. Erection system: It's the important part for Self-help elongating and removal. When the foundation was installed well, the electric block of erection system will hang the mast section from the top cage or outside of cage into the guide rail bracket installed, conversely, it will dismantle in order; put them on the ground or the top of cage.

3.17. Pulley system: when the construction elevatorheight is over 150m,it must be adopt centre power supply owing to the limit of power and cable mechanical strength, use this device storage the flexible cable.

4. Installation of construction hoist

4.1 The requirement for worker

4.1.1 The worker must possess professional knowledge and skill for building construction,at the same time, they must be training and familiar with main performance and characteristic, please be sure have skillful operating skill and the capacity of deal with the minor failure.

4.1.2 Installation personnel should have good health, without hypertension, heart disease and other disease, also have some knowledge.

4.1.3 Installation personnel must equipped with safety device, such as safety helmet, seat belt. Installation or operation after liquor is strictly prohibited.

4.1.4 Installation procedures should follow instructions, make overall arrangements, keep in touch and work together with each other.

4.1.5 Installation personnel shall be specified in the position. Leave or mutual exchange position is not allowed.

4.2 Construction site preparation

4.2.1 The user should read the construction elevatorbook carefully, According to the

construction hoists safe rules(GB/T10055-2007), select the appropriate location, Ensure lifting function maximize its carrying capacity and can meet the practical situation and environment.

4.2.2 Select installation position, should try to as close as possible to the building, promote the stability of movement, but among the components and buildings and other construction equipment (such as scaffolding, etc.) the minimum safety distance is not less than 250mm.

4.2.3. When select the foundation, should consider the foundation has certain bearing capacity, also consider building attachment point location can maximum force. The biggest attachment force about 4t, embedded hole should be left in advance.

4.2.4 The foundation is must be pouring concrete and in strict accordance with the size and position of instructions.(figure 1)

4.2.5 It should leave the anchor bolt hole in pouring foundation,, and protect pre-setting hole, after installation to lift at second casting. For concrete, dry after fastening bolts.

4.2.6 In pouring foundation, also should consider drainage measures, and shall not make chassis parts lifts in water long-term corrosion, lest affect their normal work..

4.2.7 Ensure the on-site power is good.

4.3 Preparatory work before the installation.

4.3.1 When the machinery arrived in on-site, please check it carefully, confirm everything is well without any damage or loss for parts.

4.3.2 Check the 2-3 sets attachment device and cable guide device before prepare for using, special the all kinds of connecting parts and standard parts is totally right.

4.3.3If there are other machinery equipped for installation on site(such as crane hoisting equipment, auto cranes, etc.)Please fix 4-6 pieces of guide bracket by M22X240 bolt on

the ground, and assembled in the pillar of the outlet pipe coated with grease to prevent rusting, tube outlet and rack at the ends of the earth and clean.

4.3.4 The necessary auxiliary equipment: one unit of 5t auto elevatoror tower crane, one set of theologizes.

4.3.5 Prepare Clyburn spanner (300x36), Allen wrench (25-100x14) and Z120 torque wrench and other common tools.

4.4 Formally installation.

When the above work is ready well, confirm the foundation meet the requirements, the equipment in good condition, it can lift the normal installation. In case of rain, snow, fog and wind exceed 5 shall not installed

4.4.1 The auxiliary elevatorshould hang the mainly parts (three mast section, main bottom support, cage and so on.)then put them in order. It should put on the foundation but please don't fix the under frame at this moment.(see figure 2)

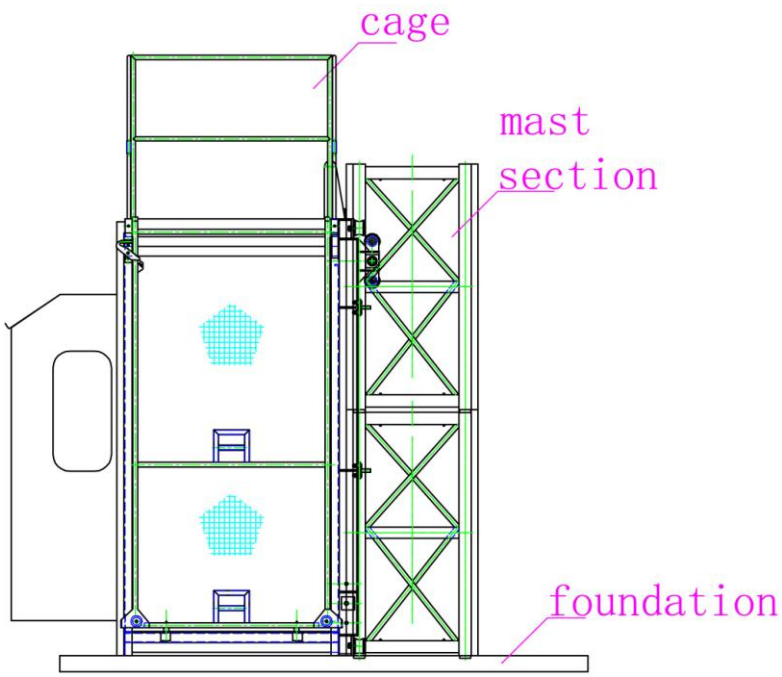

Figure 2

4.4.2 The same way on another cage.(see figure 3)

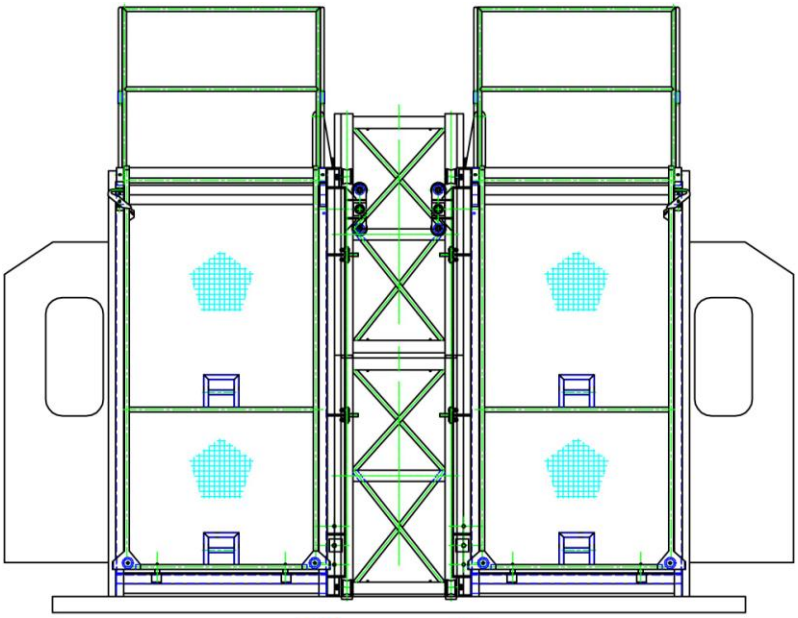

Figure 3

4.4.3 The cage driver bracket should be prepared well, adjust the back gear and roller to maximum gap, it’s convenient for bracket installation.

4.4.4 Install another mast section for construction elevatorwith lifter machinery, Tight coupling bolts(see figure 4)

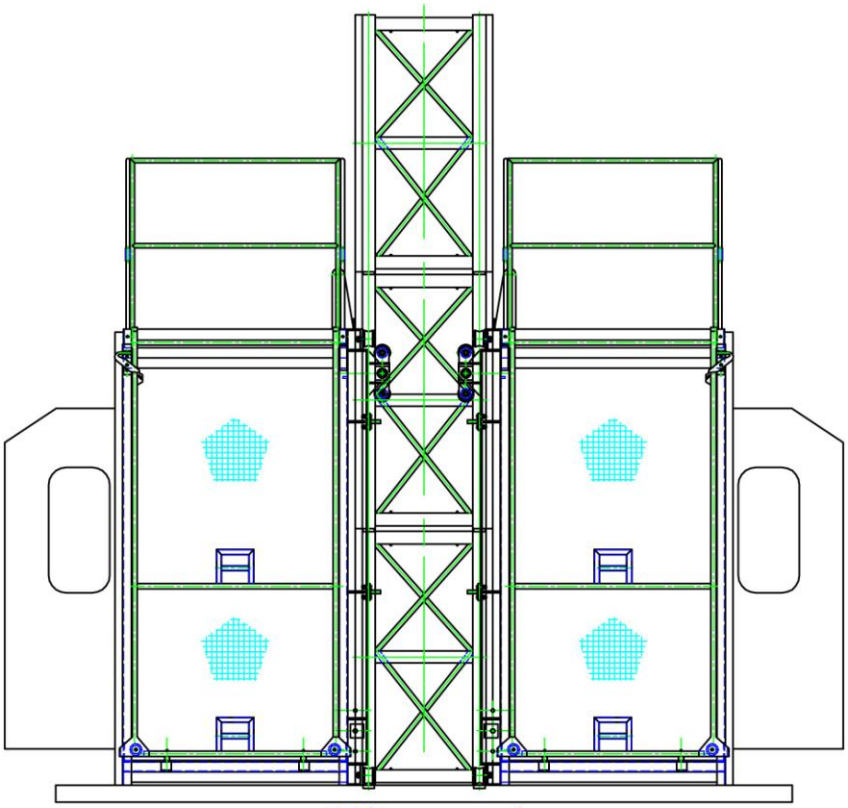

Figure 4

4.4.5Put the driver bracket on the cage, Coupling bolts.(see figure 5)

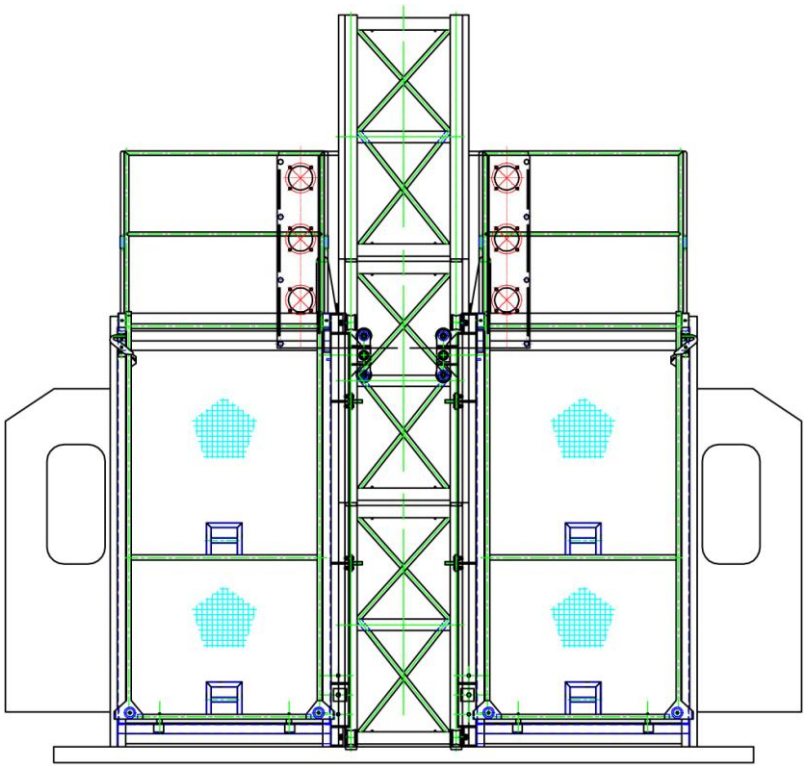

Figure 5

4.4.6 When the driver bracket is finished, the next step is two mast sections. (See figure 6)

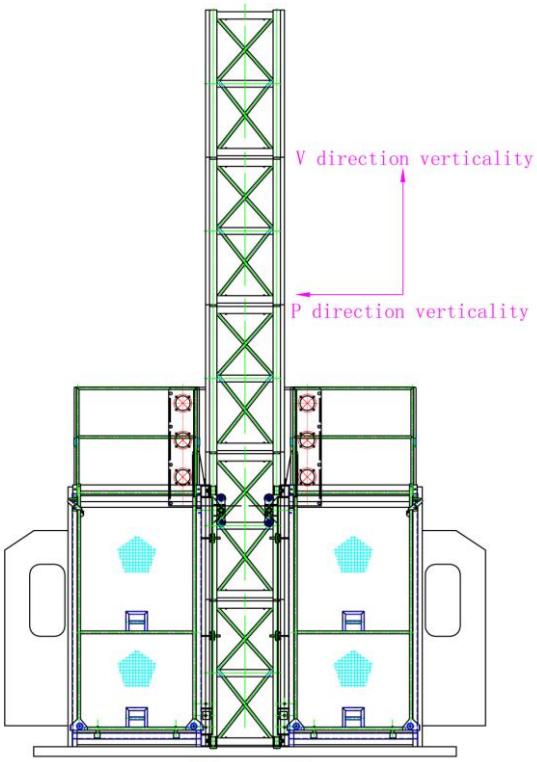

Figure 6

4.4.7 Check the verticality of guide rail bracket with theologize, In the two mutually perpendicular direction errors are not exceed 5mm. (see figure 6)

4.4.8 If the verticality meets the requirement, then the foundation can be fixed by holding down bolt. (See figure 6)

4.4.9 Put the cable storage tank in the right position and get through the power.

4.4.10 Test run should be offer. After confirmed each motion is accurate, should be install the under limit block and stop block well in order to prevent the cage from crack.

4.4.11 under limit stops block installation.

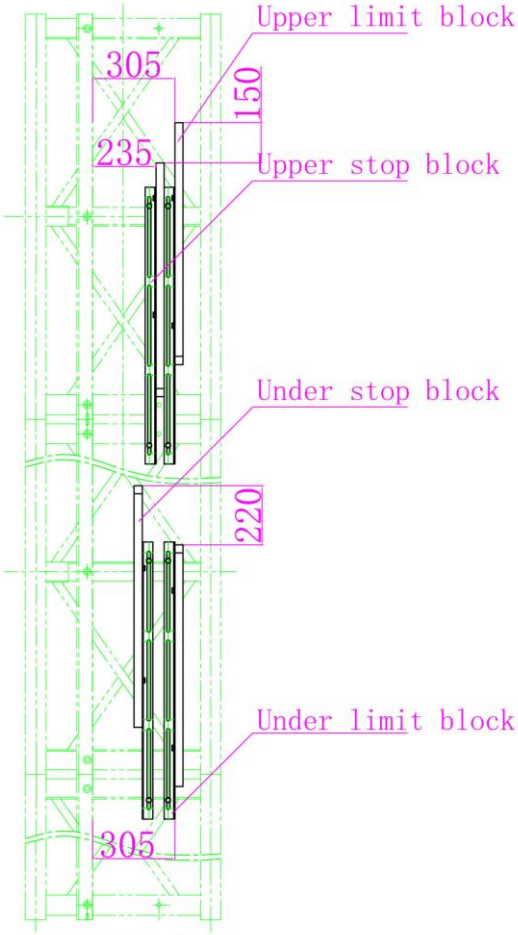

Figure 7

4.4.12. With the limit switch adjust well, the guide rail bracket should be join height, install the attachment device and cable guide bracket. Now should install the lowest attachment frame from the ground at 6-8m, also can deal with it according to the on site situation. The next step is install below two cables armor, One is at 1m from the cable door, other is 3m from the above one, Make all the bolts are reliable.

4.4.13. Processed join height working until meet the requirement. There are one set attachment frame every 7.5~8m, the top one set of attachment is high above the guide frame shall not exceed 8m, The cable guide bracket are setting every 8m.

4.4.14 Every time must measure the verticality in two directions with theologize, if exceed chart two requirement, please change it.

Table 2: guide rail bracket verticality requirement

Guide rail bracket height H（m）	< 70	70—100	100—150	> 150
Verticality error value δ（mm）	< H/1000	70	90	110

4.4.15 when the guide rail bracket reached requested height, it need to install the upper limit block and upper stop block well. First is upper limit block mounting position which should ensure the cage can stop once touch the block. The bottom of cage over the foundation about 150-200mm,the cage head is from guide rail bracket not less than 1.5m.The next step is upper limit switch block installation, please be sure the bottom of cage in a line with Construction layer when the cage stopped by the limit switch.

4.4.16 after finishing the stop block installation should be repeated test three times to check the accuracy and reliability.

4.4.17 All the roller and the back gear should be adjust well, to ensure smooth running of cage. (See adjustment part)

4.4.18 When installation work were finished, please check the fastener have loosened or not. It reached tightening torque or not, then proceed load test and cage falling test, and safety device reset properly.(see safety device and reset)

4.4.19. Install the base level enclosure well.(see figure 8)

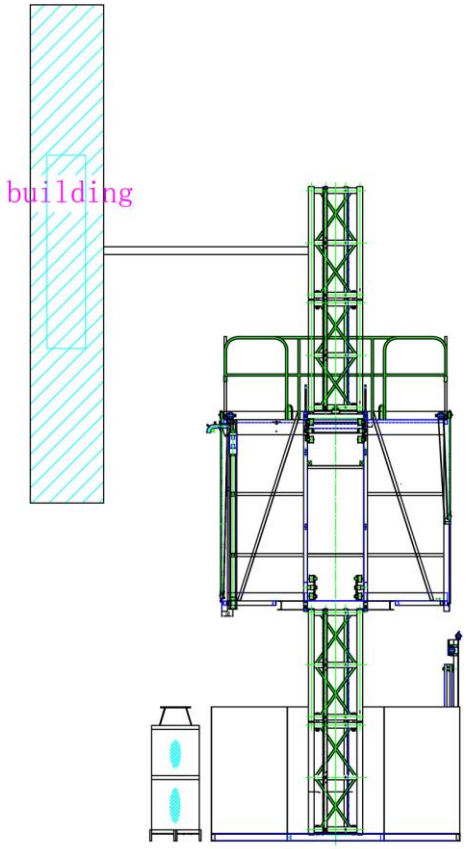

Figure 8

4.5 The guide rail bracket should be joint high with erection system

When prepare to install guide rail mast section with electric hoist, the operator should stand on the top of cage, control the construction elevatorby control box. Operation within the cage is prohibited in order prevent some accident. The user can follow the procedure as following:

4.5.1 Run the cage until the lowest position which limit block allowed.

4.5.2 Put down the rope and sling. of electric crane.

4.5.3 Hanging a mast section on the ground, actuating motor slowly, this section will be hanging from outside ground railing to top of cage, keep it in order.(figure 9)

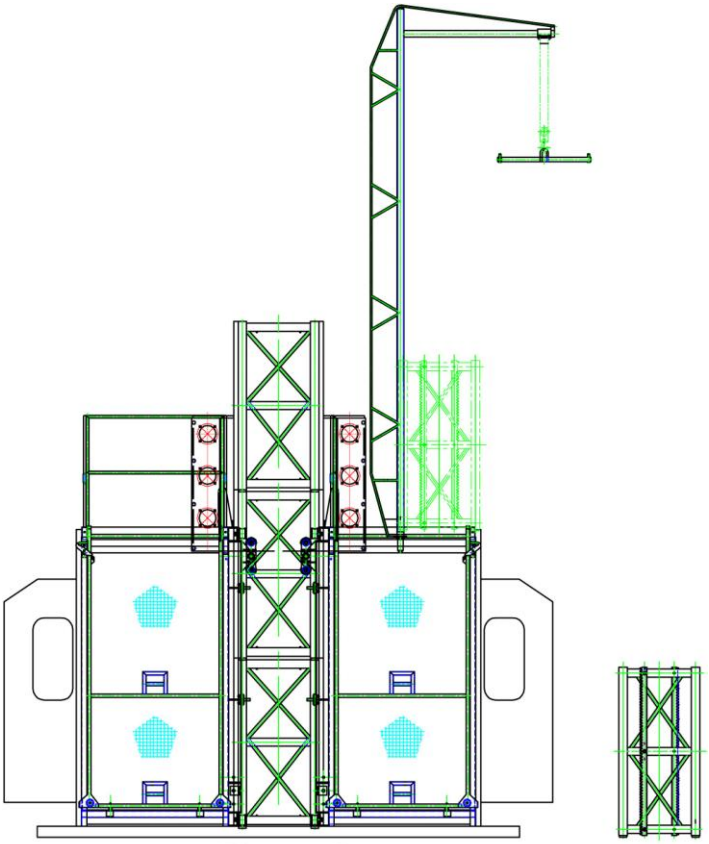

Figure 9

4.5.4 The operation staff should take all coupling bolt ,torque wrenches and other tools which required mast section installation, then lift the cage on the top.(Attention: During the process of lifting, motor crane boom should turn to a safe angle, ensure the boom is not crash with the building when the machinery on working)

4.5.5 When the cage rising, cage roof driver should keep about 250mm distance with mast section surface.

4.5.6 Hanging the mast section with electric elevatorcrane ,when the height is over the guide rail bracket about 20mm,turn the sleeve slowly, make the make the Interface properly, then put down the mast section slowly, four interface is perfectly.(see figure 10)

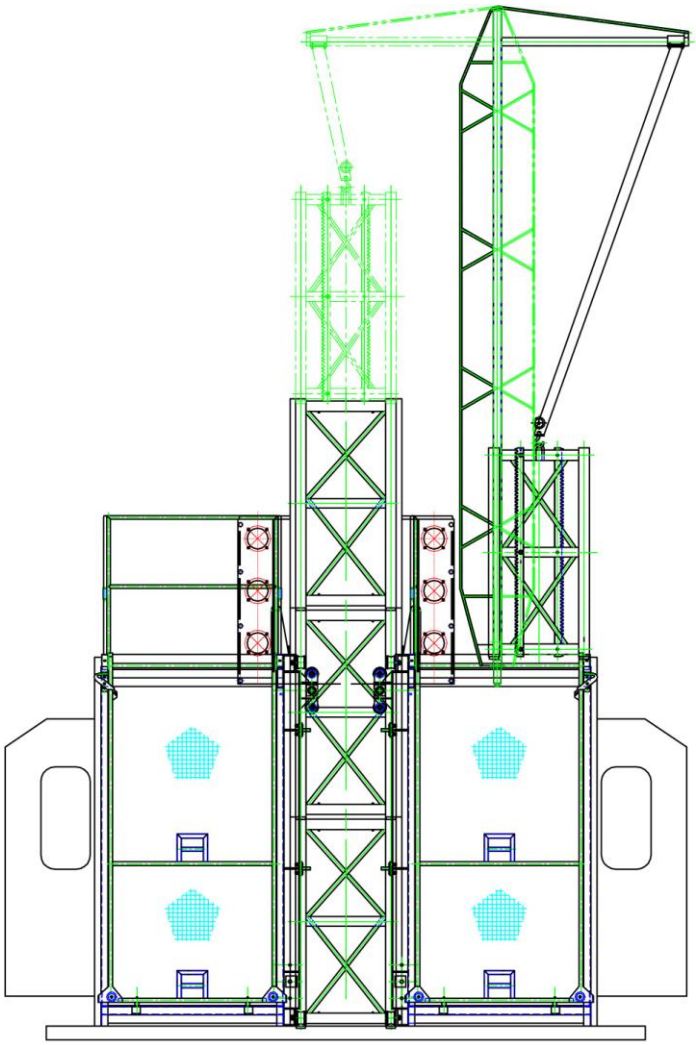

Figure 10

4.5.7 Wearing standard section bolts, with torque wrench screw bolts, should achieve no less than 30kgm torque.

4.5.8 Drop off the top lift from the master section, take back wire rope, boom will be transferred to safe direction, cage downward, preparing for the join height of next master section

Note: when join height, coat master section with butter

After join height or rise the max usage height, guide rail bracket should be put on safe section.

4.6 About installation of attachment shelf (see figure 11)

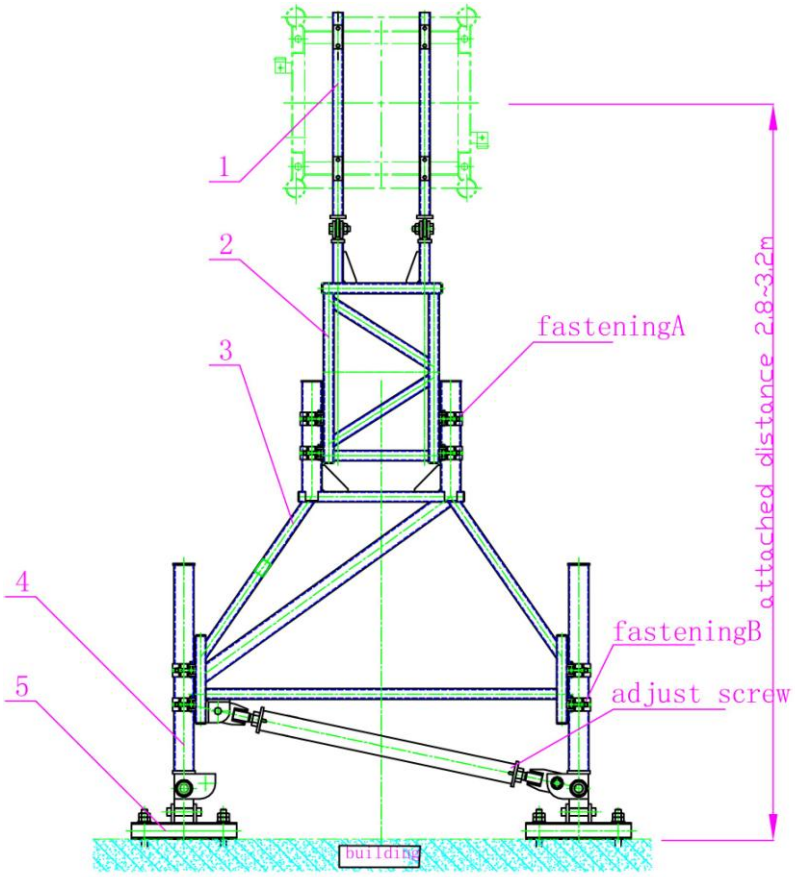

Figure 11

When guide frame installation height is more than 8m, shall install the first set of attachment, the attachment is apart from the ground height 7.5 m ~ 8m (visual), after installation once every 8m attachment, the maximum height above a place outside the attachment suspension shall not exceed 8m high.

4.6.1 First in need of guide frame height will part 1 (link rod) with U bolt coupling.

4.6.2 with existing lifting equipment will be a 2 (1), and a middle rack connected.

4.6.3 with existing lifting equipment will be A 3, 4 pieces together and two couplet, A 2 pieces of the fastener between 3 to tighten, not A thing before and after three adjustable, also A 3, 4 pieces of fastener tighten, so don't attached and adjustable stem.

4.6.4 It will be a 5 (coupling channels) and building pre-setting hole bolt coupling and tighten, through the transit after confirmation guide frame were verticality in error range, can request to lock fastener everywhere. (Adjust screw adjusting to adjust the correction guide frame perpendicularity)

4.6.5 Attachment should be installed horizontally, attachment to the horizontal plane Angle plane must not be more than 8°.

Pulley and guide cables installed (see figure 12)

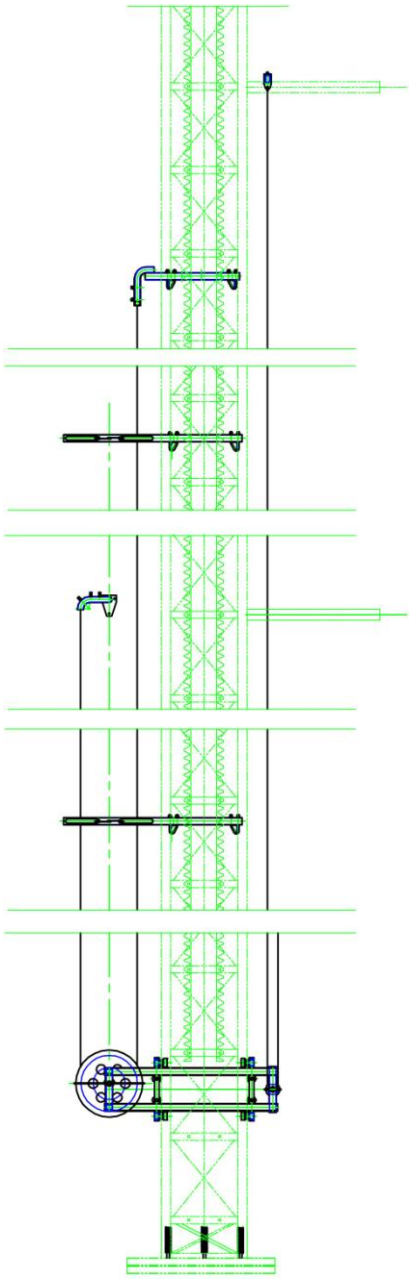

Figure 12

In general hoisting height of more than 150m construction lifter, in order to reduce power cable voltage drop and prevent cable tension is too big and damage by using belt pulley, the cable in wind direction, larger or environment under the condition of low temperature can also be used. The installation method, the paper introduces two points as follows:

4.7.1 Before installation, guide frame pulley systems installation height has more than half

of the height of installation needed.

4.7.1.1 It will be fixed cable and fixed cable crane's rod on top, start hanging cage

4.7.1.2 Torre will be fixed cable installed in the H/rod 2 + 6m in the guide frame for lifter framework (H) of the need to install.

4.7.1.3 Fixed a cable to cable access fixed bracket of terminal box, and fixed points gradual decline, then hang cage, fixed cable fixed in the guide to the lowest parts, and will be fixed at the other end of the cable to the barrier under the electric control box.

4.7.1.4 Install pulley and will wear the pulley, pulley rail track installation height for H / 2 + 45 m.

4.7.1.5 Hang cage to fixed cable pole, cut off the power electric control box in the bottom head, and power cable is under fixed cable access to fit under electric control box.

4.7.1.6 Drag power cable to the top of cage, and cable access fixed points in the junction box, bracket cable to cable and fixed cable to connect drag.

4.7.1.7 Drag cable crane cage within the limit switch points removed, through the cable crane cage in truckler guide to access the limit switch cable arm.

4.7.1.8 Closed power, and check the power supply sequence and hanging down, and gradually release cages hang cage on top of the cable. Drag (note: this must be careful, don't hurt cable) hang

4.7.1.9 Cage hanging down to the bottom, will drag the cable into the groove of the cable pulley, and adjust the length of cable, drag wooden-horses bottom from the ground - 500mm.

Install cable bull bars, installation should pay attention to in the armor cables, cable arm circle of frame can be smoothly through the shield of elastomeric shelves. Installation space of cable bull bars is 6m

4.7.2 Guide frame and the height of installation phases beginning wooden-horses cables installed

4.7.2.1 First installation, with 7.1, just need to pay attention to: fixed cable directly to guide bracket at the top, and the excess frame of cable (fixed cable and drag cable) are fixed cable from the aircraft carrier place to guide and appropriate fixation, middle pressure to scrape damaged cable.

4.7.2.2 when guide frame installation height 2H2 6m - H1 p (type of installation guide frame has H1, H2 as high fixed bracket mounting height), cable will guide frame of cable to condole top, will drag the muzzle of cable ends hanging in the cage, and make appropriate fixed crane cage rises, cable pulley can rise with the crane rails together, from the cage open shelves under fixed cable tray. Move to the top, until now installed > H / 2 + H2 6m, no longer mobile fixed cable bracket.

4.7.2.3 Fix cable bracket, relax after reinstall fixed by

4.7.1.9 Requirements drag cable length and drag the adjustment according to fix redundant cable, 4.7.1.1) steps (note: fixed cable installation position and the bracket of fixed position is installed with guide frame cables must be fixed to prevent damage),

4 lift check before using the project:

Before use, must check s several projects

5.1 Check the bolt fastener without loosing phenomena, such as there shall be timely in accordance with the provisions of the loose bolts. Tighten the torque,

5.2 Check electrical system work whether normal, the contact points and communication and wire connector is firmly, etc.

5.3 Inspect all kinds of safety limit switch is flexible, every action without limit touch block.

5.4 check running path or hang cage, ensure that hang cage running distance projection of not less than 250mm safe distance.

5.5 Check each part of the lubricating condition; filling grease lubrication (please refer to the part).

5.6 Check out into the cage crane gate, protective enclosures; check each open flexible limit switches action.

5.7 Check the gears, clearance and gear wheel with adjustment of the mesh clearance rack, whether does not conform to the requirements as normal, should be timely adjust.

5.8 After the end of each installation at to check the safety device is reliable, the action that can fall through condole cage to test.

6. The operation

6.1 lift operation, should undertake the following job

6.1.1 Shift drivers must conscientiously the work driver operation records, find out problems timely solve. When there is doubt should report relevant personnel.

6.12 if it's cold in winter, low temperature, and lift startup difficulties, after start-up and commissioning no-load several times, make gear oil temperature normalizes.

The , 6.2 must follow the operating rules:

6.2.1 Driver must be healthy without heart disease or hypertension.

6.2.1 Driver must be healthy without heart disease or hypertension.

6.2.3Do not overload, partial load, Do not mixed people goods.

6.2.4 Strictly drunk operation or not driver operation.

6.2.5 Load goods, prohibited items to hang cage, avoid run-time dangerous.

6.2.6 When wind to level is above, s, and will not stop until the bottom hang cage.

6.2.7 every time after work, must turn off the power switch, completes the on-duty records,

and will lock. Guardrail

7. Lifts and lubrication

After the first operation 40 hours, reducer then must be replaced oil press table:

Lift lubrication list

interval	Lubrication part	lubricant	usage	Note
40 hours - regardless of time at least once a month	1. reducer	L—CKE/P—320（N320 Turbine oil）		Check the oil bits
	2. rack	2# Calcium grease		When the grease and stop using lowered s, 2-3 hours to grease
	3. Safety device	2# Calcium grease		Oil filling nozzle
100 hours at least every two months - regardless of time	4. roller	2# Calcium grease		Oil filling nozzle
	5. Back wheel	2# Calcium grease		Oil filling nozzle
	6. Door parts	L—FC—32（20# gear oil）		drip
400 hours - regardless of time, at least once a quarter	7. Electric door hinge.	L—FC—32（20# gear oil）		drip
	8. Electrical brake cone.	L—FC—32（20# gear oil）		Drip, don't drop to friction plate
1000 hours for at least once a year	9.reducer	L—CKE/P—32（N320 Turbine oil）	1.5L	In oil

Products, according to different parts of the quality of the brand already raises the lubricating oil, of course, also can use quality is quite lubricant. If change different type of gear reducer, the first oil must be carefully cleaned reducer.

8. maintenance and maintenance

8.1 The correct of maintenance and maintenance, to reduce the incidence of machine, extend the machinery fault life is very important. Besides, still should maintain regular maintenance procedures according to below.

interval（h）	parts	Tooth surfaces coated grease

40 hours - regardless of time at least once a month	1. For safety device	If the file or without a safety device, should have abnormal sound operation to stop check, inspection factory
	2. signs	Ensure all signs on the machine clear and complete
	3. reducer	Oil spills - check reducer without oil, fill lube when necessary
	4. Roller and back wheel	Ensure all looseness and tighten
	5. Driven plate	Ensure all looseness and tighten
	6. Electrical brake	Guarantee fixed disks and rotating disk clearances between not less than 0.5 mm, when necessary, replace brake disc
	7. Braking distance	Ensure full hanging cage declines, no more than 0.35 m braking distance
	8. Electrical system	Check the terminals and contact, without loosening
	9. cable	Check the cable or wear or distortion
	10. rack	Tooth surfaces coated grease
100 hours at least every two months - regardless of time	11.Standard section connecting bolts	Check whether loose phenomenon, timely tighten
	12. Helps wall frame coupling bolts	Check whether loose phenomenon, timely tighten
	13. Limit, the limit switch and touch	Check whether the switching, flexible mobile location or touch
	14. Cable orientation device	Check whether by cable, guide frame successfully, whether fixed wear rubber
	15. Pinion and rack	Click "wear and tear" wear adjusted limit
	16. lubricating	According to the requirement
400 hours - regardless of time, at least once a quarter	17. roller	Check the wheel and the pillar tube clearance and wear allowance
	18. Safety device	According to the test requirements fall fall test
	19. motor	According to "motor is introduced
1000 hours for at least once a year	20. Rubber joints	Check the rubber extrusion and wear
	21. Lubrication clearance	See "lubricating list."
	22. Corrosion and abrasion	Check the equipment and parts, for often corrosion protection measures must be taken

8.2Maintenance and replacement

8.2.1 Roller replacement

When the roller bearings (type 6206) damage or wheel wear out-of-tolerance (reference "adjustment and wear limit") must be replaced with a new bearing rollers, ensure the normal working.

The method is as follows:

8.2.1.1 Fall cage to the ground by Wood mat

8.2.1.2 Wrench unscrews and removes the bolt roller, off old wheel.

8.2.1.3 Loaded on new roller, adjust good wheel and rail frame column, tighten the clearance between the bolt roller, torque, and not less than 20 kg.

8.2.2 Back wheel replacement

When the back wheel bearing damage (type 6309) or back wheel wear the inner (see "and" wear), must be replaced new bearing and back wheel.

The method is as follows:

8.2.2. Hang down the cage with wood pad.

8.2.2.2 Back wheel bolt to loosen, off old back wheel.

8.2.2.3 Reinstall new back wheel and adjust rack and gear mesh clearance, tighten the bolt back wheel torque, not less than 30kg. M.

8.2.3 Reducer drive gear replacement

When driving gear reducer gear-shape wear has reached the limit (reference "adjustment and wear limit") must be replaced new gear.

The method is as follows:

Drop cage to the ground with block mat.

8.2.3.3 Gear reducer drive down under the axial end face and the lock nut is round, pull small gear.

8.2.3.4 Trunnion surface will be swabbed clean and butter.

Will the new gear to 8.2.3.5 axis, superior round nuts and lock piece (see figure 13).

8.2.3.5 Trunnion surface will be swabbed clean and butter.

Will the new gear to axis, superior round nuts and lock piece (see figure 13).

8.2.3.7 Driven to pack to drive rack, wear the bolt (not tighten) and installed back wheel.

8.2.3.7 Adjust good gear mesh clearance. Will the bolt back wheel lock torque (less than 30kg/ m) then driven plate bolt tightened torque (m), not less than 20kg

Recovery and connect braking motors and brake wiring. Good motor,

Electrify commissioning

Gear replacement method (see below figure 13.)

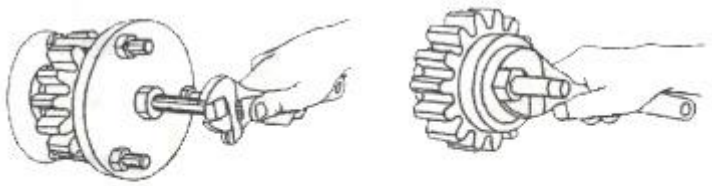

Figure 13

8.2.5.1 Loosening bolt rack, tear down the worn or damaged the rack, when necessary to rack can be localized flame, connecting piece. Clean rack,

According to the size 8.2.5.2 installing new rack, bolt pre-tightening force for 20kg. M.

8.2.6 Safety device

In accordance with the national standards for safety device about safety device standards, the old rules for safety device, the new security disposed of by below replacement procedures.

8.2.6.1 dismantling the safety device switch, remove the micro switch wiring.

8.2.6.2 Loosen and driving safety board between the bolt, safety device.

8.2.6.3 With the new security, with no less than 20kg j m, adjusting screw bolt torque safety device between meshing gears and rack.

8.2.6.4 Meet good micro switch line, installed on the switch.

According to the instructions 8.2.6.5 fall test, check the safety device testing fall of braking condition.

According to the safety device reset 8.2.6.6 illustrate reset.

8.2.6.7 Lubrication safety device.

8.2.7 Motor replacement

Replace motor, remove and replace process of gear reducer is identical.

Note: do not use process disassembling hammer.

If you only need to change, can press brake motor following steps:

8.2.7.1 Electrical brake structure (see figure 15)

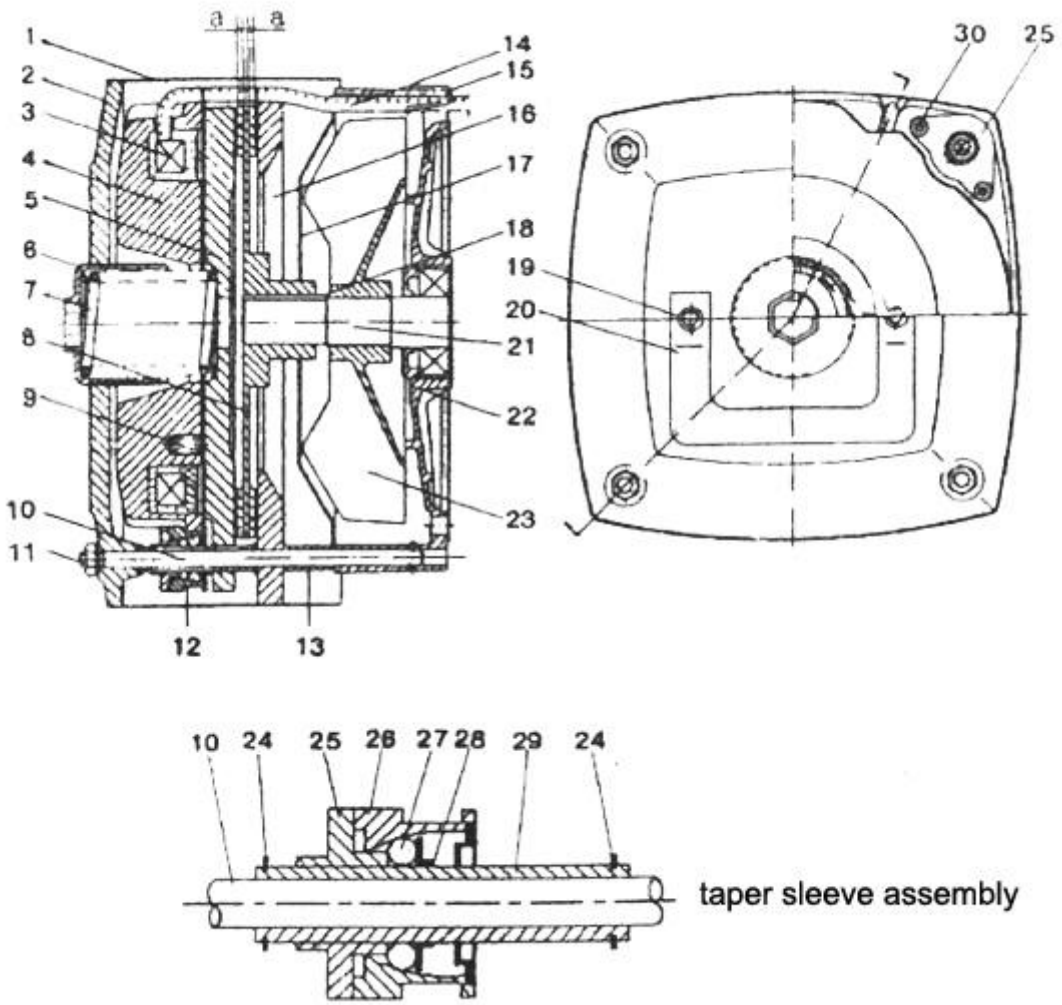

1 cover 2 end plate 3 solenoid 4 Electromagnet seat 5 Electromagnetic bit 6adjusting ring 7 Brake spring 8 Rotating disk brake 9 Compression spring 10 bolts

11nuts 12 Bushings assembly 13 Every set 14 Wire cable 15 Cable clamp 16 Fixed brake disc 17 Fan cover 18key

19 Braking bolts 20 Release lever 21 spindle 22 Cover after

23fan 24 Axis with block hutch 25 bracket 26 Taper sleeve

27ball 28 The compression spring 29 casing 30 nut

8.2.7.2 Brake disc replacement

Rotating disc (8), when its wear parts for a single to friction material thickness of 1mm close brake, It must be replaced. Steps are as follows:

A. (1) removed shields and mechanical release handle (20), determination and records of adjusting the position (6), in order to replace brake disc brake torque can keep the original after.

B. cut down full (6),remove brake spring (7),loosen nut (11),will cover (2).

C. dismantling the electromagnet seat (4) and (5), bit, friction is placed on face under the old XinPan, brake disc.

D. Repack electromagnets (4) and (5), and bit that bit near the new rotational brake disc (8).

E) The electromagnet seat (4) and (5) to bit retaining bolt (10), cable of groove to fixed brake disc (16) on the groove, slowly the nut (11), prevent magnets and bolt in warp bit.

F. pack good end plate (2), screw nut (11), to pack good spring (7) and the adjustment of (6), and tighten the determination to 1 above steps.

G. make brakes work several times, inspection work is normal.

H. Finally mount guard (1) and release handle (20), note (19) absolutely cannot be tightened.

Note: in the normal use of brake for many times before the test, such as the brake can loosen, should check:

Whether the rectifier bridge - normal

Contactor is normal. -

Measuring coil voltage (- 195 volts) rated dc voltage, such as a fault, coil winding with the

electromagnet replacement.

8.2.7.3 The replacement of the magnet seat

a. Remove the protective cover (1) and mechanical release handle (20), remove the cable (14) and cable clamp (15), measured and recorded a good adjustment sleeve (6) locations to reload reset.

b. Remove the sleeve with a hex wrench (6) and the brake spring (7), remove the nut (11), remove the cover (2) and the magnet holder (4), and Block heel magnet.

c. Remove the screws (30), work for the magnet blocks.

d. Remove the four spring shaft with a ring (24), remove the armature (5), removed the spring (9). Note: Do not put the casing (29) from the sleeve (26) and pull.

e. Remove only the back seat from the magnet device (including the parts (25), (26), (27), (28), (29)), into the new magnet seat, careful not to pull the sleeve casing.

f. Installed spring (9).

g. The armature (5) through the casing so that the groove facing the coil cable (14).

h. Installed spring clamps (24).

i. Armature voltage to the magnet blocks (5), fitted with sleeve (28) and screws (30).

j. Ensure that the gap between the armature magnet blocks and uniform size of 1.6 ± 0.1mm.

k. The magnet and armature mounted to the seat mounting bolts (10), the cable groove of being fixed to the brake disc (16) on the groove.

l. Cover (2) into the fixing bolt (10), and slowly tighten the nut (11), to prevent the armature magnet in the bolt on the seat and warping.

m. Installed brake spring (7) and adjust the set (6), according to Step 1 tighten down to adjust the position of sets (6).

n. Coil connected cables (14), a brake power on the gate a few times to check working properly.

o. Fitted with protective cover (1) and the release handle (20), note (19) must not be tightened.

8.2.7.4 devices only retreat replacement

a. Click "Replace Block magnet described in" Remove the brake.

b. Regulatory agencies from the need to replace the removed screws on the disk.

c. Remove spring retainer (24).

d. The bracket (25) pressure to the sleeve (26), release the casing.

e. Do not pull out the sleeve casing, remove the armature, the radial remove the regulatory agencies.

f. The new institutions of self-adjusting seat mounted to the magnet, the armature installed.

g. Click "Replace Block Magnet" fitted with electromagnets and other parts.

9. Adjustment and wear limit

9.1 Adjustment of wheel side

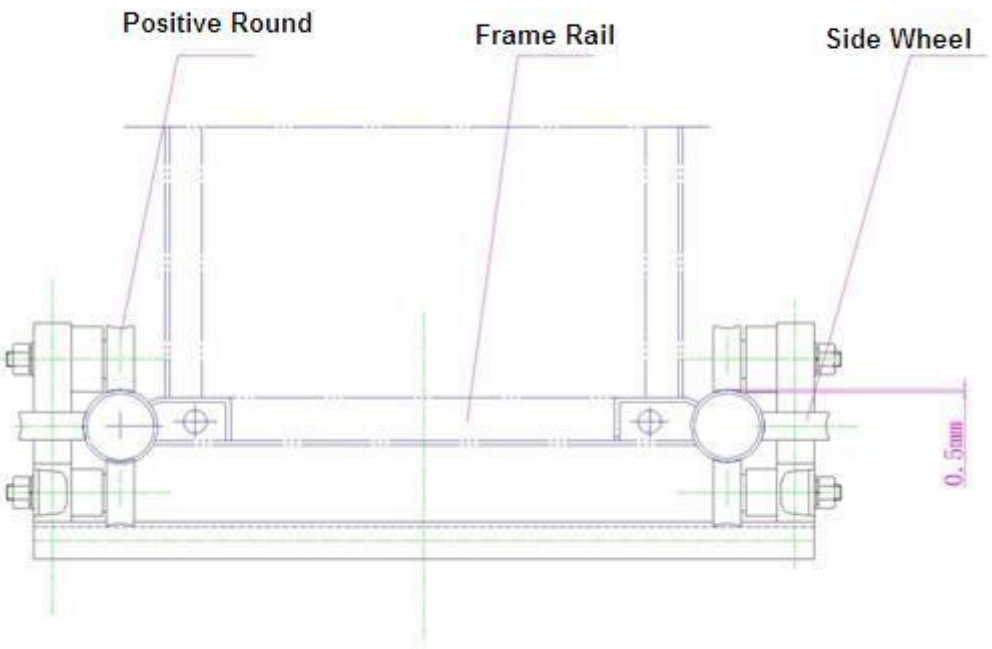

(Figure 16)

Frame rails must be adjusted in pairs on both sides of the corresponding column-oriented roller tube. Turn the wheel of the eccentric wheel and the rail frame side of the gap between the column tube is 0.5mm or so, after adjusting the appropriate moment by not less than 20kg.m its connection bolt. Figure sixteen shows.

9.2 Adjustment of the upper and lower roller

In the rail between the frame and the safety hook mounted on a wheel from a screwdriver to adjust track

The whole eccentricity, keeping the space appropriate.

Outside of the cage with the booster method to make the next adjustment wheel from the track, with not less than 25kg.m after adjustment bolt torque will be.

Scroll wheel up and down the force should be uniform, ensure that the driver board and safety gear gear box gear device meshing with the rack teeth along the length of the direction of not less than 50%.

9.3 Adjustment of the back wheel

Safety behind the driver board and rack hook plate inserted into a large screwdriver between the back so the back wheel and back out of the rack, turn the back wheel to adjust the gap eccentric sleeve, the drive gear meshing with the rack side of the gap for the 0.4-0.6mm , meshing along the tooth surface is not less than 40%, on both sides of contact surface in the uniform distribution of the pitch, the tooth should be centered on the length direction.

9.4 roller wear limit (see figure 17)

Measurement: measured with a venires caliper

Table 5 roller wear limit

Measuring	the new wheel size (mm)	wheel wear (mm)
A	Φ74	minimumΦ72
B	75±3	minimum72
C	R40	maximum R42

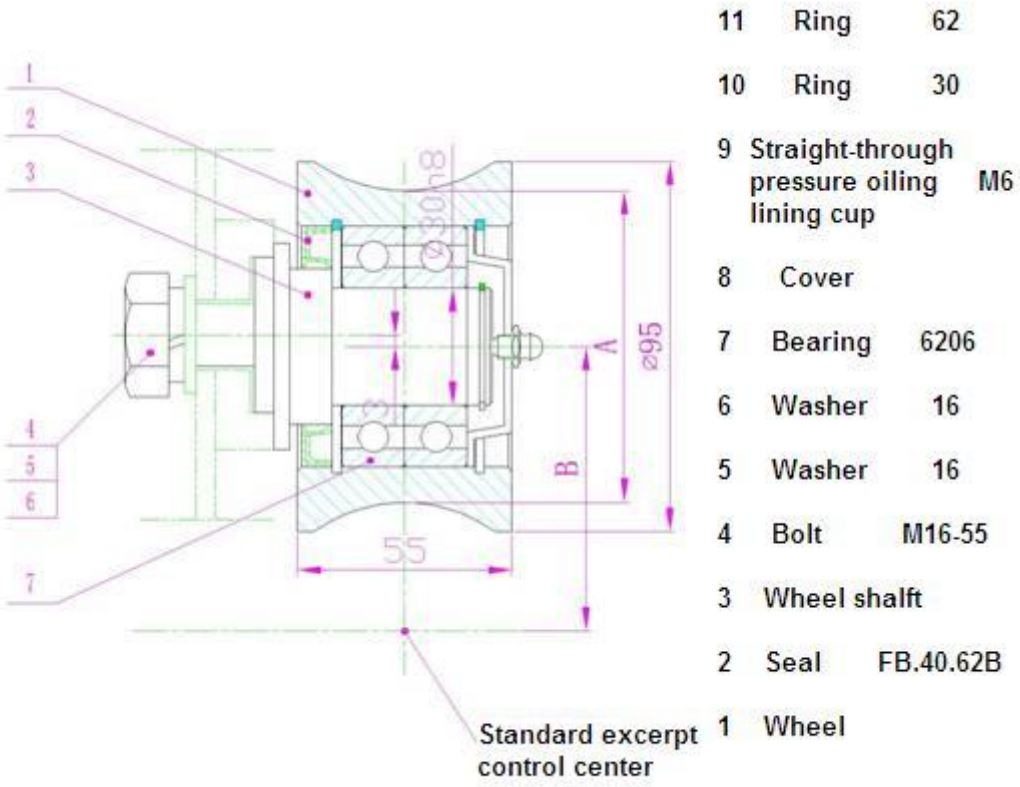

Figure 17

9.5 drive gear and gear wear safety device (see Figure 17)

Measurement: the measuring 2 teeth, with the amount of vernier caliper

Table VI-driven gear and gear wear limit safety device

New gear L 37.1mm

L 35.8mm maximum wear gear

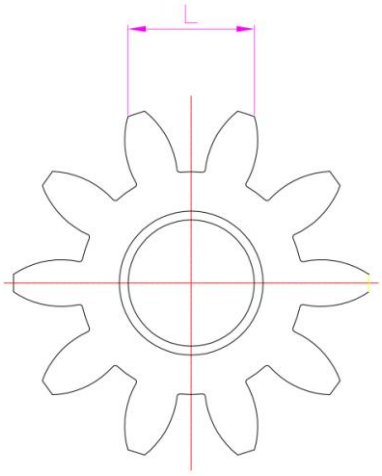

Figure 18

Figure 18 gear wear limit

9.6 rack wear limit (see Figure 18)

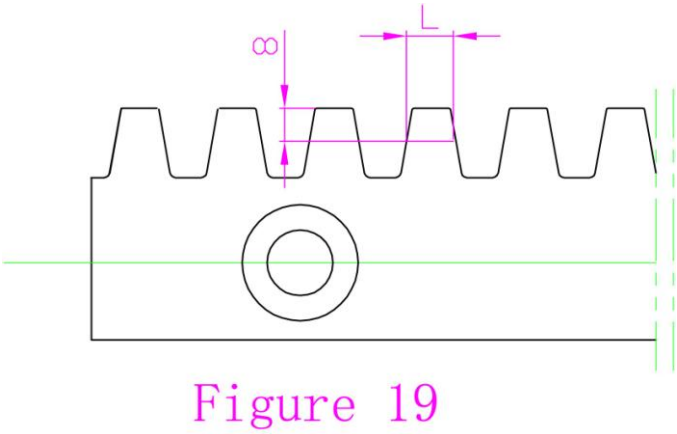

Figure 19 rack wear limit

Vermeer caliper with a tooth thickness L

New rack	12.566mm
Maximum wear rack	11.6mm

9.7 with the back wheel of the wear limit venire caliper

New back wheel outer	Φ124mm
Maximum wear the back wheel	Φ120mm

9.8 turbo reducer maximum wear limit (see Figure 20)

Measurement: Check the hole through the gear unit

With a feeler measurement

The maximum allowable amount of wear for the L = 1mm

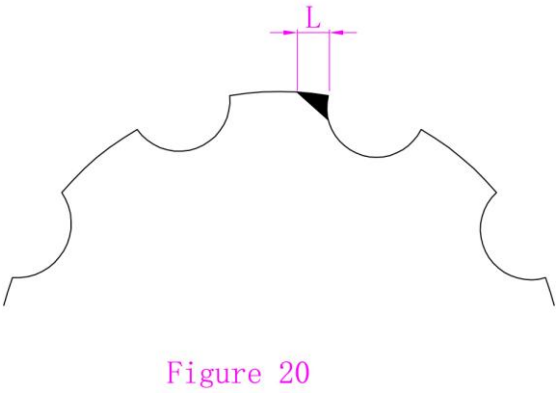

Figure20 maximum wear limit

9.9 Motor rotating brake disc wear limit (Figure 21)

Measurement: measured with a feeler

When the rotating brake disc friction material thickness of a single 5mm wear to close when the brake disc

must be replaced

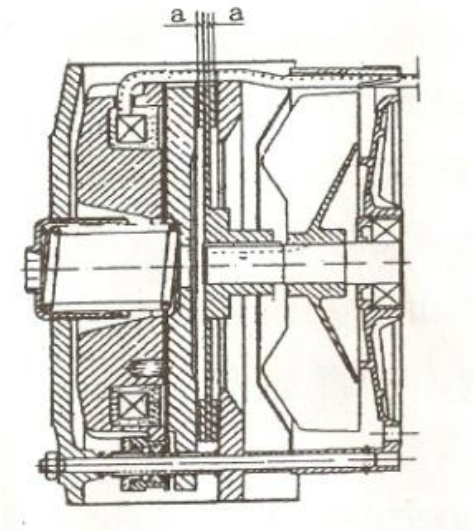

Figure 21 Brake disc wear limit

9.10 Adjustment of brake distance

Elevatorbraking distance when fully loaded down should not exceed 350mm, less than the motor braking torque, the motor should be adjusted to the end of the brake springs.

10. Hoists Drop test

All newly installed lift cage should be the fall of the rated load test, after at least once every month.

Work in the , the security system to stop or control the spontaneous noises, they should immediately stop operations and notify the production plant.

Drop test, the cage may not manned, make sure all parts of the lift can be carried out without fail, follow these steps:

10.1 cut off the power, the ground control button box power wire access box, straighten out the cable, to prevent the card cage when lifting off the cable.

10.2 installed in the cage after the rated load 2000kg connected to the main switch, the ground control button box, the cage stops increased by about 10 meters.

10.3 Press the "fall" button and hold it, then loosened the motor brake does not work, falling cage was a free state, to achieve safety device operation speed, the cage will be a smooth stop at the rail rack system.

Note: If the bottom of the cage about 4 meters from the ground when the safety device

cage system has not been stopped, and you should immediately release the "fall" button to restore the motor brake to prevent the cage hit the bottom.

10.4 The test should not move up the start cage, because at this safety device has control of the power micro switch off, if still able to move, you should re-adjust the micro switch.

11. Safety device reset

Drop test, anti-fall safety device should be reset. Reset, the following steps: (see Figure 22)

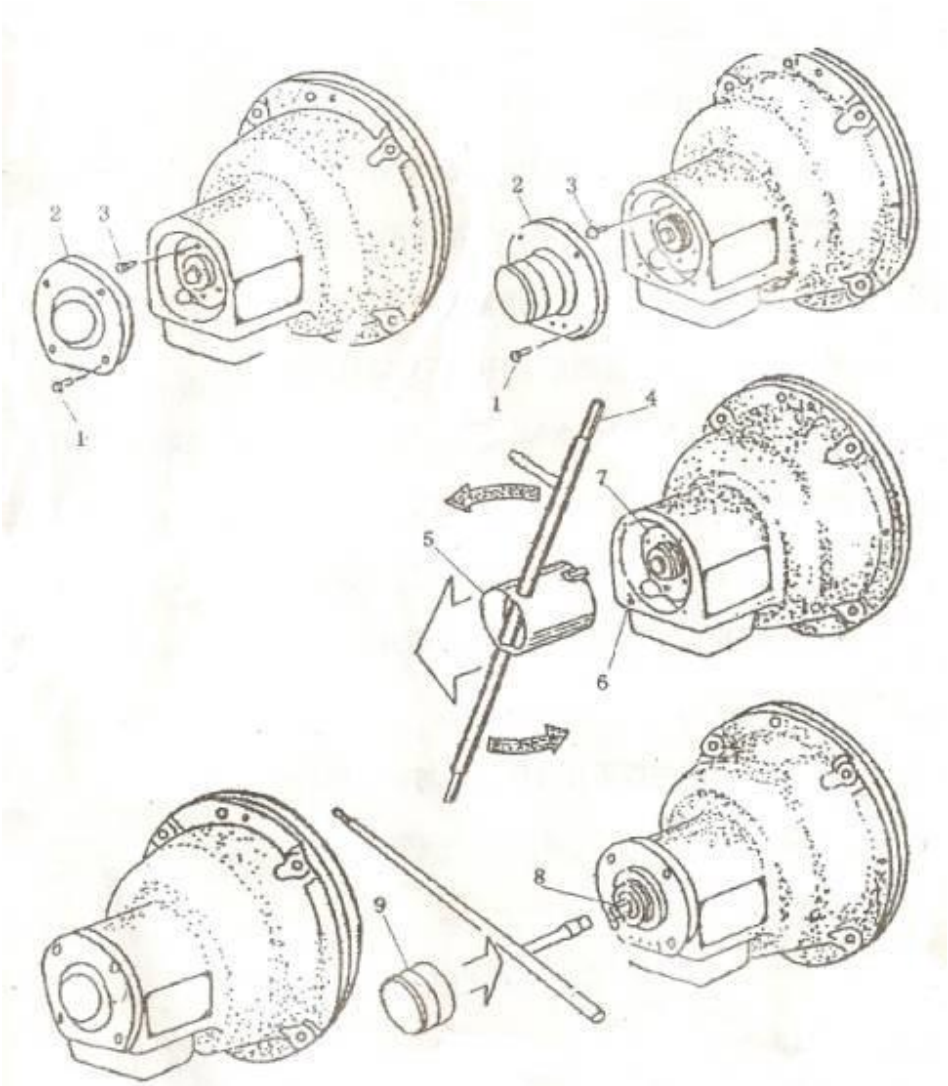

Figure 22 Reset safty device

1 Screw convers 2 conver 3 screw 4 Handle

5 Reset special tools 6 Pin 7 Nuts 8 Bolts

11.1 unscrew the screws (1), remove the covers (2), remove the screw (3).

11.2 with a special tool (5) and rocker (4), unscrew the nut (7), until the pin (6) of the tail and the end flush with the shell.

11.3 mounting screws (3) and covers (2), remove the covers (9), hand tighten the bolts as much as possible (8), and then use tools to bolt (8) Tighten the 30 °, installed covers (9).

11.4 Turn the main power supply; you must start up the cage more than 200mm, so that the centrifugal and friction drum thrown from the block.

12. demolition

Lift the demolition process and the installation process just the opposite. According to the following procedures.

12.1 on the system by setting up the top of a crane attached to the frame above the standard section and removed section by section, the cradle cable, safe transport to the ground.

12.2 will be attached to the top of a shelf removed, transported to the ground.

12.3 Repeat the process 1, the first and then the rest of the standard cable guide bracket section and removed.

12.4 Repeat the process 2, the top of the second attachment frame also removed.

12.5 Repeat the process 3,4, until only the basic part of the lift.

12.6 at the bottom of the buffer spring cage removed, the lower limit and lower limit and received a good touch off the block, and then carefully pull by hand brake motor will slide the lowest cage and implementation. (Note that the decline must be careful not to hit the end of the cage)

12.7 removed the power cord and cable lift cylinder and the connection between the limit switch, the cable drum and put away under the electrical control box.

12.8 The protective fence will be removed and put away the ground, do not twist and squeeze.

12.9 cage with lifting device, separate chassis, in a safe place.

12.10 Loosen the bolt, the chassis part of the split go.

12.11 to all parts (including standard parts and special tools) organize packed, and remove dirt, ready to storage or transfer to the next site.

13. Electrical System

13.1 General Tips

Electrical workers must be managed by a professional lift electrical system. With commonly used tools such as multicenter, clamp ammeter and so on.

13.2 Specific requirements and inspection methods

13.2.1 electrical failure electrical diagram should be consulted first, his response to the electrical equipment of the structure and function.

13.2.2 Check the power supply voltage is normal.

13.2.3 When the isolating switch, limit switch connected, check the electrical control box cable into the line voltage is normal. Such as phase and phase sequence protection fault indicator is not lit, take the wrong phase sequence power, the power cord can be commutation, the light is bright.

13.2.4 When the lift is not running, to ensure thermal relay, micro switch safety device, hanging kennel door limit switch, air switch control circuit is closed, the emergency stop button is not pressed, the main contactor should pull.

13.2.5 Check the control cage running up and down if the signal can reach the switch on the electrical control box; the upper and lower travel limit switch if the signal can reach the electrical control box on the hand can be automatically reset after the operation.

13.2.6 to run up and down the lift test, should ensure that the motor brake completely open.

13.3 Electrical schematic diagram (table 2)

14. Electrical and mechanical faults and Analysis

Failure	Symptom	Analysis Number Symptom
1	Closing the power switch is jumping	Circuit internal injuries, short circuit or grounded phase
2	Power supply is normal, but do not pull the main contactor	1. Limited position switch did not reset. 2. Safety device action 3. Take the wrong phase sequence 4. Component damage or open circuit, short circuit
3	Operation switch in the run up and down position, but no action contacts	1. An unreasonable limit 2.Operation switch short-circuit
4	Difficulty in starting the motor, and abnormal noise	1. Brake did not open 2. Serious overloading 3. Motor phase
5	Upper and lower limit switches running does not work, but the limit switches work	1. The upper and lower limit switch is damaged 2. Limit collision block shift

		3. Contactor adhesion
6	AC contactor delay the release of the phenomenon when	Obstruction or adhesion contacts
7	Circuit is normal, but normal operation, sometimes action, sometimes not normal	Lines, limit exposure to bad or virtual access
8	Cage can not start, the motor stall	1. Brake is not open 2. Overload, power supply voltage is less than 360 V or large impedance
9	Cage has since stopped running up and down the phenomenon of	1. Overload operation, thermal relay 2. Line is bad 3. Hanging kennel is not closed, the door limit switch contact is not good
10	Excessive temperature rise of transmission	1. Insufficient lubrication or deterioration 2.Cage abnormal resistance when running
11	Movement safety device during normal operation	1. Calibration of speed is too low 2. Centrifugal spring loose block

12	Do not disengage the motor brake	1. Ascending, descending damage to the contactor auxiliary contact 2. Brake coil damage 3. Rectifier damage
13	Cage chattering when running	1. Gear meshing gap is too large 2. Wheel gap is too large

15. The main wearing parts list

No.	Name	Number	Model
1	Drive gear	6	Module8,teeth 15
2	Back wheel	6	OdΦ124mm
3	Wheel	24	Bottom diameter Φ74mm
4	Gearbox input seal	6	
5	Motor friction disc	6 A / unit	
6	Limit switch	2	
7	Rectifier bridge	2	1200V 25A

16. Mainly purchased parts list

No	Name	Number	Model
1	Motor	6 A / unit	YZZ132M—4
2	Reducer	6 A / unit	Center distance 125mm
3	Safety device	2 A / unit	SAJ40—1.2A

4	Main cable		YC3X16+2X6
5	Wire rope		Φ5 Galvanization

17. Attached figure 1

18. Attached figure 2 (the following of Attached figure 1)

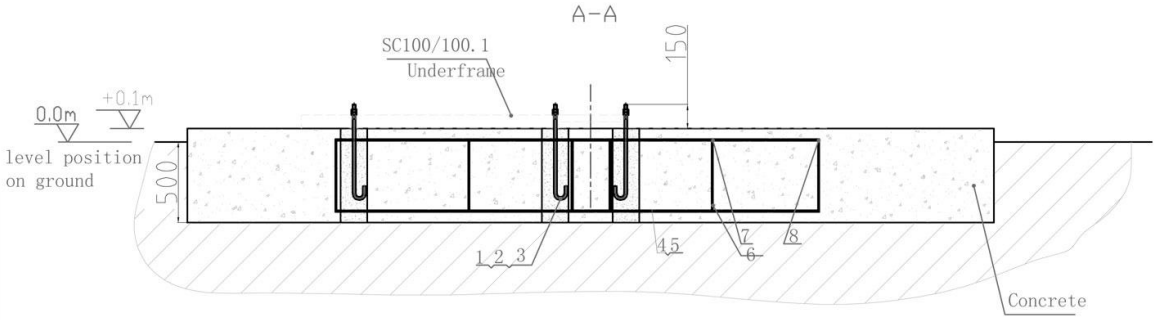

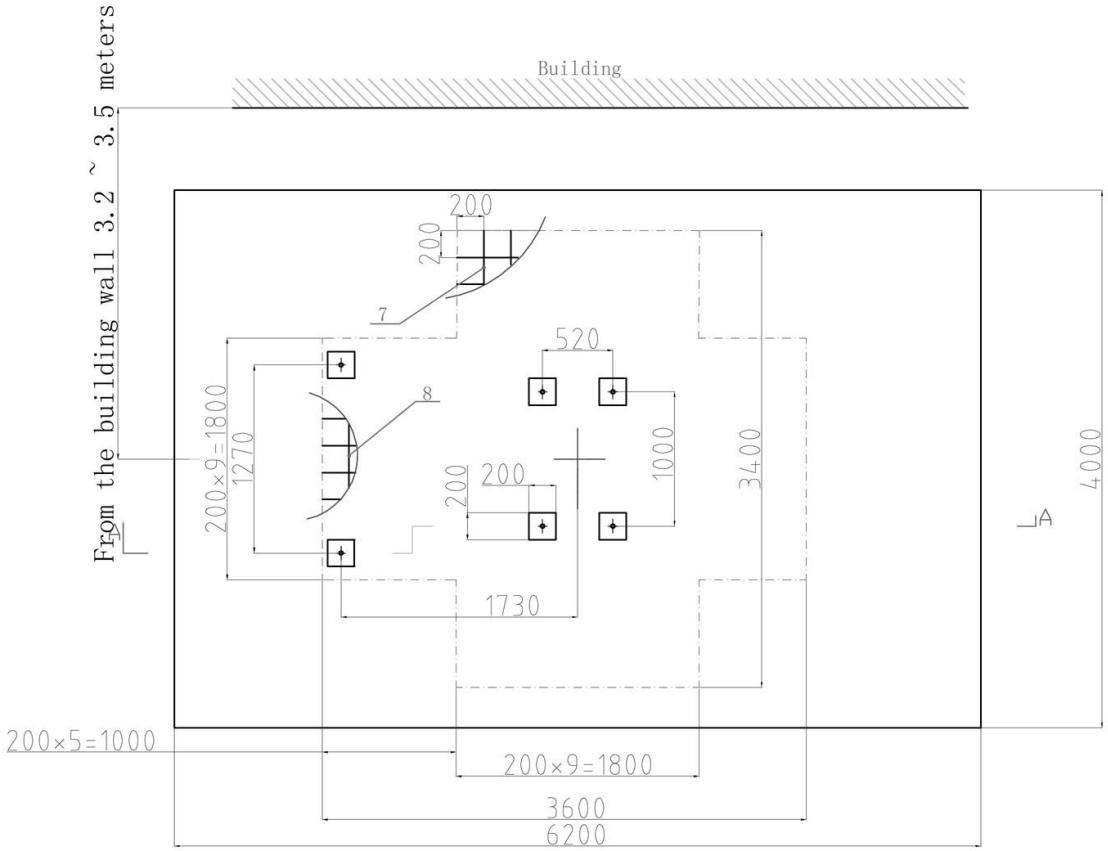

Technical requirements

1. Soil bearing capacity not less than 0.15MPa;
2. Concrete strength grade isC30(GB50164-92), ordinary Portland cement strength grade not less than 42.5R (GB175-1999). Concrete casting vibrated, can not have loose phenomenon
3. The depth of ground not less than500mm when pouring the concrete, Reserved six square holes for foundation bolt installation, starting second casting after finish the installation.
4. 2mm gap is allowed on the basis of foundation。
5. dash dot line (- - -) part is steel bar strap scope size, active line part is casting scope.
6. drainage facilities should be equipped around foundation and central foundation.
7. Cross bar and vertical bar ends should be made hook shape like the chart; The length in the list does not contain bending part

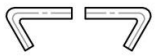

NO	mark	name	QTY	Material	unit weight	total weight	
8	SC200/200.14-205	Vertical bar2 round Ø10-1800	20	Q235A			
7	SC200/200.14-204	vertical round bar1 Ø10-3400	20	Q235A			
6	SC200/200.14-203	stud round barØ10-440	270	Q235A			
5	SC200/200.14-202	cross round bar2 Ø10-1800	16	Q235A			
4	SC200/200.14-201	cross round bar1 Ø10-3600	20	Q235A			
3	SC200/200.14-2	foundation bolt M24*600	6	Q235A			
2	GB/T 95-1985	washer 24	6				
1	GB/T 41-2000	screw M24	12				

Reinforced Concrete

Beijing Jiuhong Heavy Industry Machinery Co.,Ltd

foundation

SC100/100.14

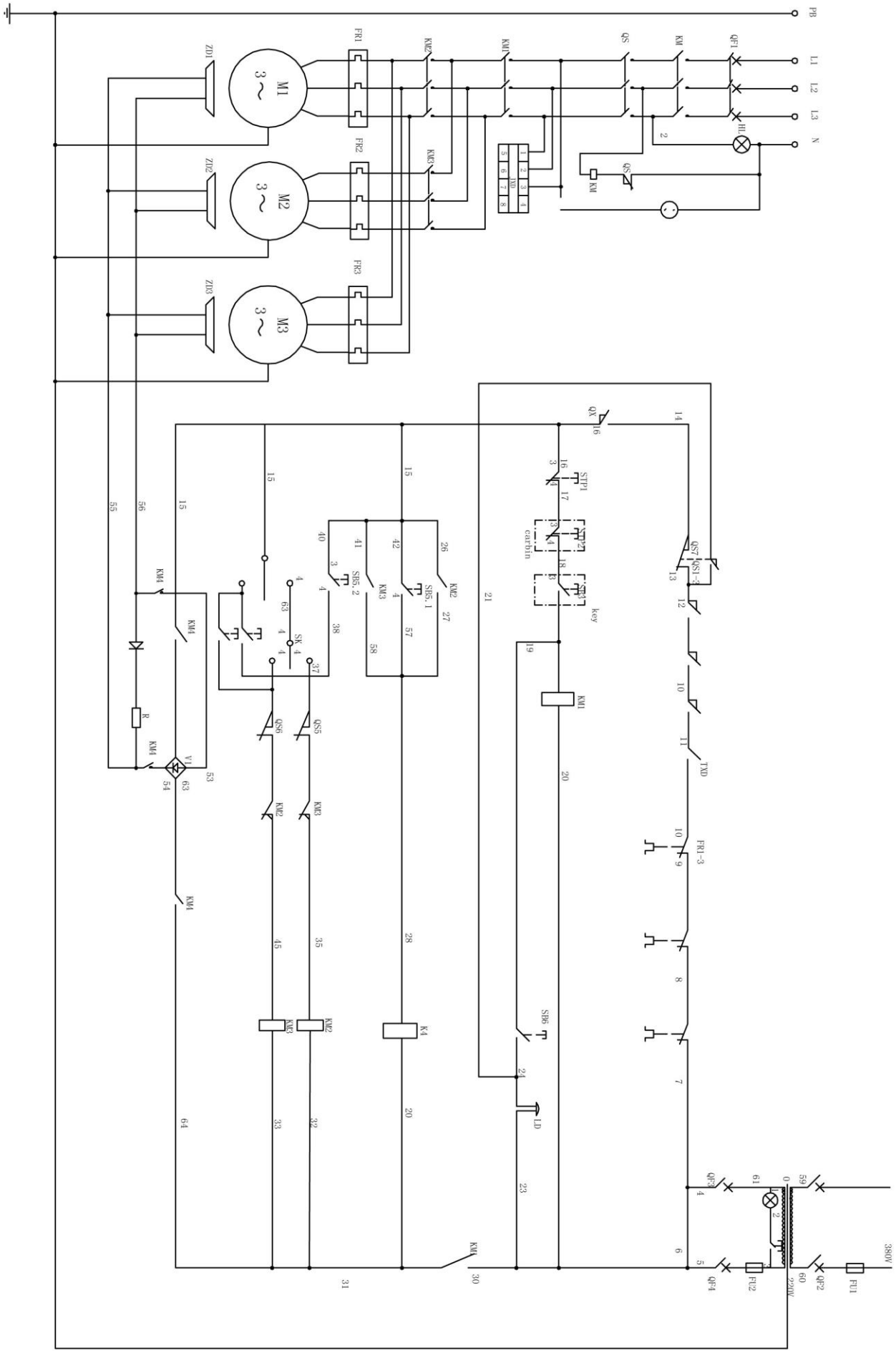

19. Construction elevatoreight hot selling points

Ⅰ. Monitor

Most command of hoist’s traveling or parking is realized via interphone by ground operators or the so-called leveling unit, which are always interrupted by the noise and other obstacles in the construction sites. And Andy wrong packing or accidents would occur simply due to the non proficiency or carelessness of the operator, which would surely cut the working efficiency and probably cause big accidents or economic loss of the manufacturer.

To efficiently avoid such accidents, we designed the warless monitoring system-an X-ray wireless camera set on the cage, which records the entire live running situation and forwards the data to the collector at the side of operation station. The collector would display all the data in a very clear way. The whole system is compack, convinient,and clear.

Ⅱ.GPS Positioning system

After-sales service: GPS largely promotes the service quantity and timeliness.

Live monitoring:24-H around the clock global positioning system.

Safety control: Auto alarms to avoid over speed and fatigue operation, recorded in the report table.

Full travel record: save and display the recording data of up to 12 months.

Dispatch and command center: Chinese display screen, audio guide, telephone,etc.

Outreach alarm: Promote alarm for outreach running.

Remote power Interrupt: Lock the machine when necessary via command.

Remote restore: Unlock after the operator’s application.

Reliability: High

Maintenance: Easy and convenient by remote control.

Volume:Compact,convenient for concealed mounting.

Attention: No one to No eight should be selective purchasing accoring to your requirement.

Ⅲ.Microcomputer wind speed unit

1.Single-screen LED display,PC overlay.

2.SCM control, keyboard indications.

3.Used to display the live wind speed and force.

4.Mounting type: Wall-attaching.

5.Dimension(mm): 197.5mm*90mm*45mm

Ⅳ. Floor call system

In most construction sites nowadays, people command via their own voice, beating on the scaffoldings, stones or interphones, which are always disturbed by noises and violate the rules of civilized construction.

The poor communication prevents the elevatorfrom being timely and precisely lifted to the designated floor, which definitely cuts working efficiency and increases frequency of hoist’s empty-load travel.

The monitoring device largely reduces the lifting frequency, gear running impact and brake abrasion, thus realizes a longer lifetime of the speed-reducing box and the hoist. It is economic.

Ⅴ.Loading weight limiter

LD-IS Loading weight limiter is equipped with alarm buzzer and warning lights to prevent full load and overload. It can also be a full load touch spot for driving the external aural and visual alarm used to turn off the motor power. The limiter is specially designed for the lifting system. It is stable, reliable, accurate,procise and economic.

It provide locking signal input port, Avoid false alarm and misoperation which brought by starting load impact .

1.Single-screen LED display,PC overlay.

2.SCM control,keyboard indications.

3.Mainly used for elevating capacity protection.

4.Instrument demension: 166mm×110mm×62mm.

Ⅵ.Fall protection Device

It is a crucial unit for gear building hoist. It prevents the elevatorfrom over speed and crash. It's advanced, compact, stable, precise, sesure, balanced and light.

Provide locking signal input port, Avoid false alarm and disoperation which brought by starting load impact .

Ⅶ. Parking floor device

Construction elevatorparking floor protection device ensure the driver device and operation will be cut off when the cage stop in a floor,be sure the cage is no falling,no running.

Ⅷ.Floor-selecting system

● Digit keyboard selecting design realizes a precise and secure park at any designated floor. Easy to use and laborsaving.

●Free and reliable switch between manual and auto floor parking.

گروه صنعتی دزفول